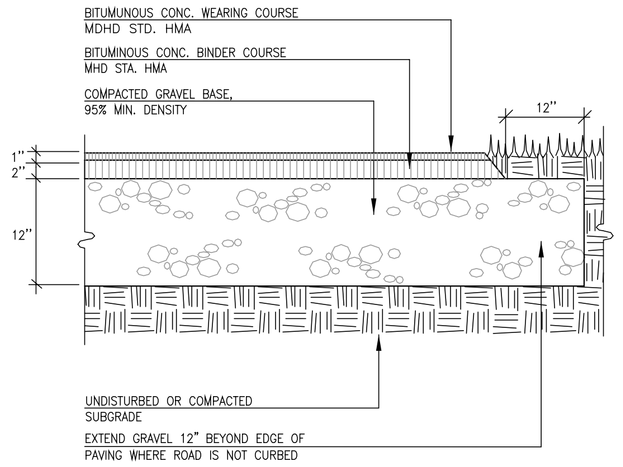

1 / L4 **Bit. Conc. Road Paving**
Not to Scale

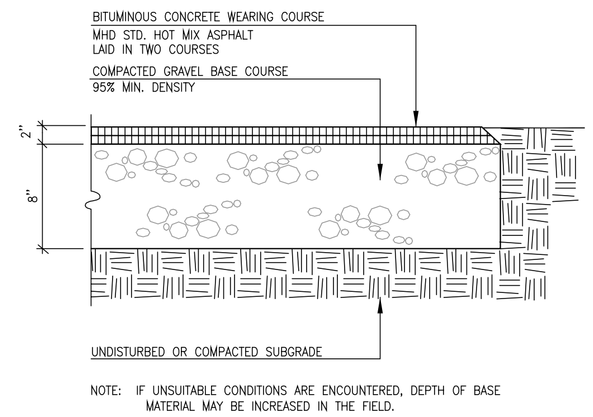

2 / L4 **Bit. Conc. Walk Paving**
Not to Scale

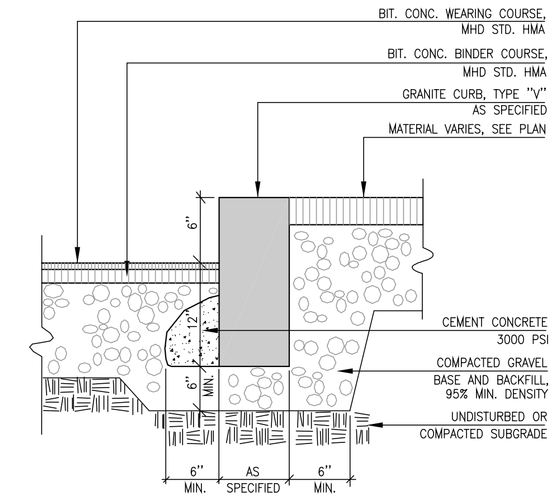

3 / L4 **Granite Curb**
Not to Scale

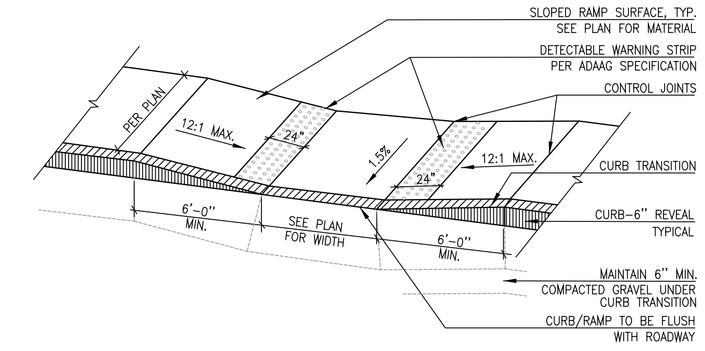

4 / L4 **Sidewalk Ramp Transition**
Not to Scale

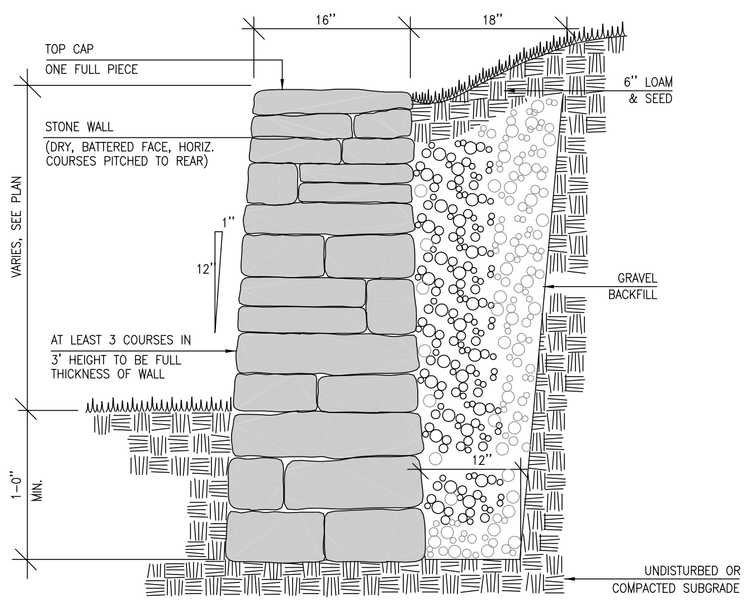

5 / L4 **Stone Retaining Wall**
Not to Scale

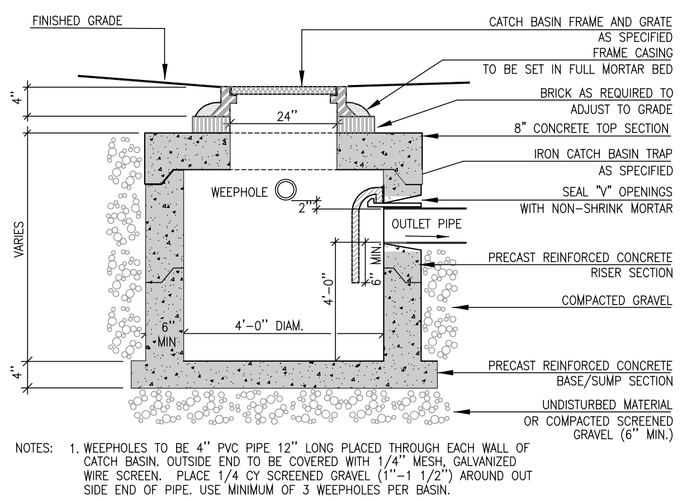

6 / L4 **Catch Basin**
Not to Scale

7 / L4 **(not used)**
Not to Scale

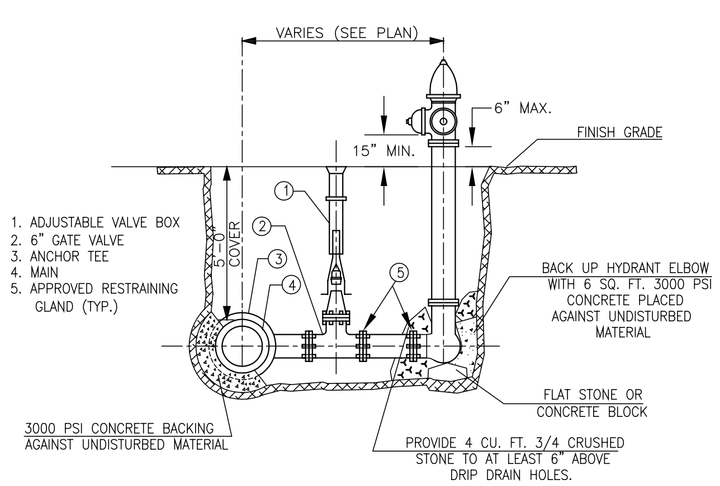

8 / L4 **Hydrant Installation**
Not to Scale

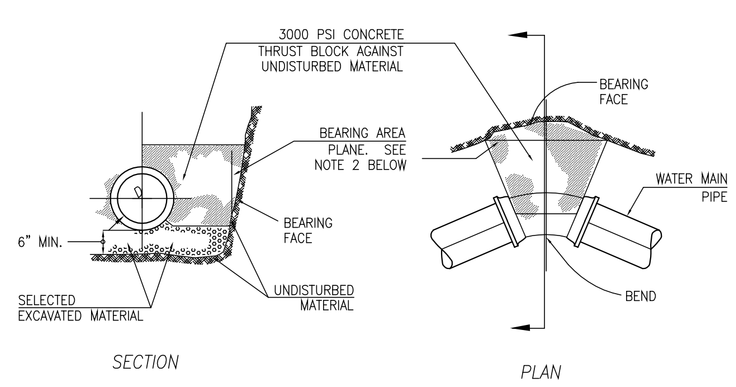

NOTES:

1. CONCRETE THRUST BLOCKS AND RODS SHALL BE REQUIRED ON ALL BENDS, TEES, ETC. RODDING SHALL BE TO THE FIRST FULL LENGTH OF PIPE ON EACH SIDE OF THE FITTINGS TO BE RESTRAINED UNLESS CONDITIONS REQUIRE ADDITIONAL RESTRAINTS.
2. REQUIRED BEARING AREA TO BE CALCULATED ON VERTICAL PLANE 90° TO RADIAL PLANE PASSING THROUGH MIDPOINT OF BEND.
3. MINIMUM BEARING AREA: 2.0 SQ. FT.

9 / L4 **Conc. Thrust Block**
Not to Scale

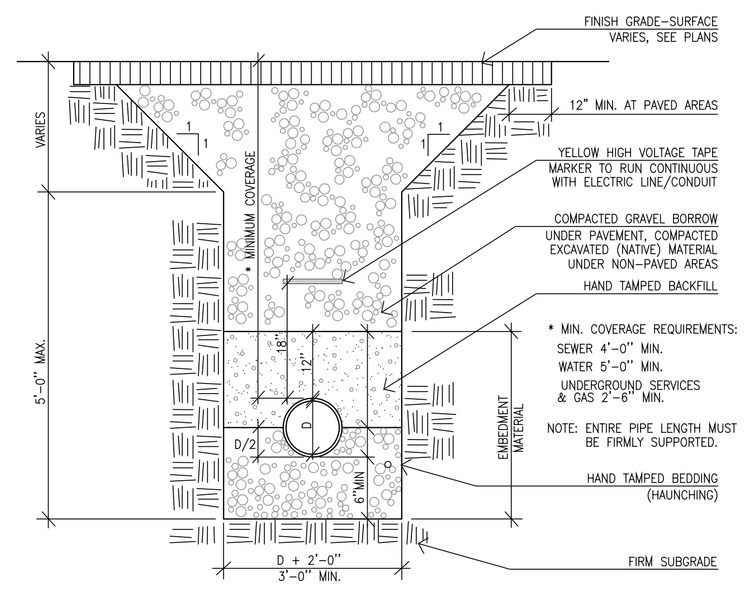

10 / L4 **Typical Utility Trench**
Not to Scale

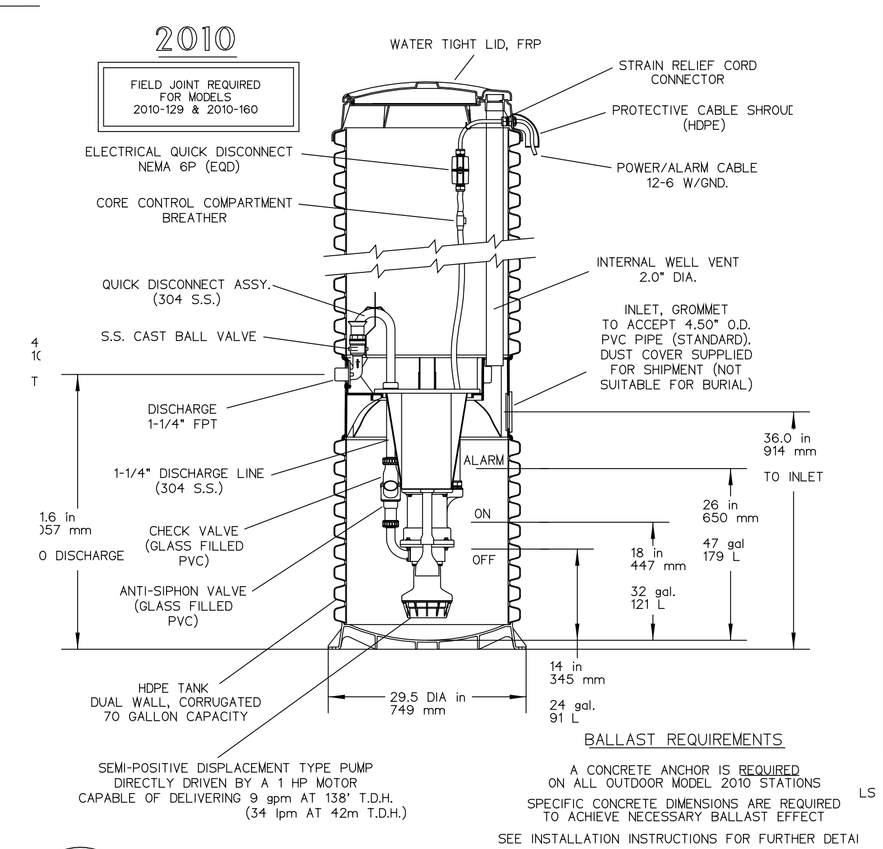

11 / L4 **EONE Pump System Typical Detail**
Not to Scale

The Berkshire Design Group, Inc.

Landscape Architecture
Civil Engineering
Planning
Urban Design
Environmental Design

4 Allen Place, Northampton, Massachusetts 01060
(413) 582-7000 • FAX (413) 582-7005

Email: bdg@berkshiredesign.com
Web: http://www.berkshiredesign.com

COMMONWEALTH OF MASSACHUSETTS
MARK B. DARNOLD
CIVIL
No. 32459
REGISTERED PROFESSIONAL ENGINEER

MASSACHUSETTS
Y. MICHAEL LIU
No. 1180
REGISTERED LANDSCAPE ARCHITECT

This drawing is not intended nor shall it be used for construction purposes unless the signed professional seal of a registered landscape architect or civil engineer employed by The Berkshire Design Group, Inc. is affixed above.

©Copyright The Berkshire Design Group, Inc.
This drawing and all of its contents are the express property of The Berkshire Design Group, Inc., and shall not be copied or used in any way without the written consent of The Berkshire Design Group, Inc.

North Street Condominiums

North Street &
Northern Avenue
Northampton, Massachusetts

FOR PERMIT REVIEW ONLY
NOT FOR CONSTRUCTION
April 14, 2009

Details

Revisions

Date: April 14, 2009	Sheet Number
Scale: As Noted	**L4**
Drawn By: YML/BCD	
Checked By: YML	